YASKAWA

YASKAWA AC Drive-V1000

Compact Vector Control Drive

NEMA Type 4X/IP66 Installation Manual

Type: CIMR-V□□A□□□□□□□□□□

Models: 200 V Class, Three-Phase Input: 0.1 to 18.5 kW
200 V Class, Single-Phase Input: 0.1 to 3.0 kW
400 V Class, Three-Phase Input: 0.2 to 18.5 kW

To properly use the product, read this manual thoroughly and retain for easy reference, inspection, and maintenance. Ensure the end user receives this manual.

安川インバータ V1000

小形ベクトル制御

NEMA Type 4X/IP66タイプ 設置要領書

形　　式 CIMR-V□□A□□□□□□□□□□

容量範囲 200 V級（三相電源用）0.1～18.5 kW
200 V級（単相電源用）0.1～3.0 kW
400 V級（三相電源用）0.2～18.5 kW

製品を安全にお使い頂くために，本書を必ずお読みください。
また，本書をお手元に保管していただくとともに，最終的に本製品をご使用になるユーザー様のお手元に確実に届けられるよう，お取り計らい願います。

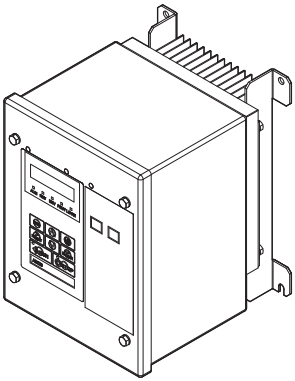

MANUAL NO. TOBP C710606 35D

Copyright © 2008 YASKAWA ELECTRIC CORPORATION™

All rights reserved. No part of this publication may be reproduced, stored in a retrieval system, or transmitted, in any form, or by any means, mechanical, electronic, photocopying, recording, or otherwise, without the prior written permission of Yaskawa. No patent liability is assumed with respect to the use of the information contained herein. Moreover, because Yaskawa is constantly striving to improve its high-quality products, the information contained in this manual is subject to change without notice. Every precaution has been taken in the preparation of this manual. Nevertheless, Yaskawa assumes no responsibility for errors or omissions. Neither is any liability assumed for damages resulting from the use of the information contained in this publication.

Table of Contents

1 PREFACE AND SAFETY 4
2 PRODUCT OVERVIEW 9
3 RECEIVING 10
4 COMPONENTS 13
5 MECHANICAL INSTALLATION 17
6 ELECTRICAL INSTALLATION 28
7 CONDITIONS OF ACCEPTABILITY 35
8 CABLE GLAND SELECTION 36
9 DRIVE COOLING FANS 43
10 DRIVE REPLACEMENT 51
11 EMC GUIDELINES COMPLIANCE 52
12 REVISION HISTORY 53

1 Preface and Safety

Yaskawa manufactures products used as components in a wide variety of industrial systems and equipment. The selection and application of Yaskawa products remain the responsibility of the equipment manufacturer or end user. Yaskawa accepts no responsibility for the way its products are incorporated into the final system design. Under no circumstances should any Yaskawa product be incorporated into any product or design as the exclusive or sole safety control. Without exception, all controls should be designed to detect faults dynamically and fail safely under all circumstances. All systems or equipment designed to incorporate a product manufactured by Yaskawa must be supplied to the end user with appropriate warnings and instructions as to the safe use and operation of that part. Any warnings provided by Yaskawa must be promptly provided to the end user. Yaskawa offers an express warranty only as to the quality of its products in conforming to standards and specifications published in the Yaskawa manual. NO OTHER WARRANTY, EXPRESS OR IMPLIED, IS OFFERED. Yaskawa assumes no liability for any personal injury, property damage, losses, or claims arising from misapplication of its products.

◆ Applicable Documentation

This manual provides instructions on installing the V1000 NEMA Type 4X/IP66 drive. For more specific information on the operation of this product, refer to the other manuals listed in the following table:

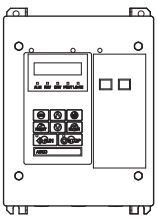	**Yaskawa AC Drive - V1000 NEMA Type 4X/IP66 Installation Manual** **Manual No.: TOBP C710606 35**
	This manual contains basic information required to install the V1000 NEMA Type 4X/IP66 drive. Carefully review this manual along with the Quick Start Guide accompanying the **NEMA Type 4X/IP66**.
	Yaskawa AC Drive - V1000 Technical Manual
	This manual describes installation, wiring, operation procedures, functions, troubleshooting, maintenance, and inspections to perform before operation. To obtain instruction manuals for Yaskawa products access these sites: U.S.: http://www.yaskawa.com Japan: http://www.e-mechatronics.com Other areas: contact a Yaskawa representative.
	Yaskawa AC Drive - V1000 Quick Start Guide
	This guide is packaged together with the product. It contains basic information required to install and wire the drive. This guide provides basic programming and simple setup and adjustment.

◆ Terms

Note: Indicates a supplement or precaution that does not cause drive damage.

Drive: Yaskawa AC Drive-V1000 NEMA Type 4X/IP66

◆ Registered Trademarks

Company names and product names listed in this manual are registered trademarks of those companies.

◆ Supplemental Safety Information

Read and understand this manual before installing, operating, or servicing the drive. The drive must be installed according to this manual and local codes.

The following conventions are used to indicate safety messages in this manual. Failure to heed these messages could result in serious or possibly even fatal injury or damage to the products or to related equipment and systems.

⚠ DANGER

Indicates a hazardous situation, which, if not avoided, will result in death or serious injury.

⚠ WARNING

Indicates a hazardous situation, which, if not avoided, could result in death or serious injury.

⚠ CAUTION

Indicates a hazardous situation, which, if not avoided, could result in minor or moderate injury.

NOTICE

Indicates an equipment damage message.

General Safety

General Precautions
• The diagrams in this section may include drives without covers or safety shields to illustrate details. Be sure to reinstall covers or shields before operating any devices. • Any illustrations, photographs, or examples used in this manual are provided as examples only and may not apply to all products to which this manual is applicable. • The products and specifications described in this manual or the content and presentation of the manual may be changed without notice to improve the product and/or the manual. • When ordering a new copy of the manual due to damage or loss, contact your Yaskawa representative or the nearest Yaskawa sales office and provide the manual number shown on the front cover.

⚠ DANGER

Heed the safety messages in this manual.

Failure to comply will result in death or serious injury.

The operating company is responsible for any injuries or equipment damage resulting from failure to heed the warnings in this manual.

⚠ WARNING

Fire Hazard

Select the correct main circuit fuse for use with the drive.

Failure to comply could result in death or serious injury due to fire. Refer to the Quick Start Guide packaged with the drive to select the correct main circuit fuse for UL/CE compliance.

NOTICE

Do not expose the drive to halogen group disinfectants.

Failure to comply may cause damage to the electrical components in the drive.

Do not pack the drive in wooden materials that have been fumigated or sterilized.

Do not sterilize the entire package after the product is packed.

2 Product Overview

◆ About This Product

The V1000 NEMA Type 4X/IP66 drive is safe for indoor use and complies with the following standards:

- UL50E: Enclosures for Electrical Equipment, Environmental Considerations
  NEMA Type 4X
- International Standard IEC 60529 Degrees of protection provided by enclosures (IP Code)
  IP66

NEMA Type 4X – Enclosures constructed for either indoor or outdoor use to provide a degree of protection to personnel against incidental contact with the enclosed equipment; to provide a degree of protection against falling dirt, rain, sleet, snow, windblown dust, splashing water, hose-directed water, and corrosion; and that will be undamaged by the external formation of ice on the enclosure.

IP66 – Dust-tight enclosures to do not allow any dust to penetrate. The enclosure guards the drive against powerful jetting water sprayed from any direction and is protected against access to hazardous parts with a wire.

The LED operator is located on the outside of the protective case for easy programming accessibility.

The drive is designed to be mounted as a stand alone unit and is not intended for mounting inside of another enclosure.

3 Receiving

◆ Model Number and Nameplate Check

Please perform the following tasks after receiving the drive:

- Inspect the drive for damage.
  If the drive appears damaged upon receipt, contact the shipper immediately.
- Verify receipt of the correct model by checking the information on the nameplate.
  Figure 1 shows where the nameplate has been placed on the drive. Remove the front cover and check the information listed on the nameplate. ***Refer to Removing the Front Cover on page 31***.
- If you have received the wrong model or the drive does not function properly, contact your supplier.

■ Nameplate

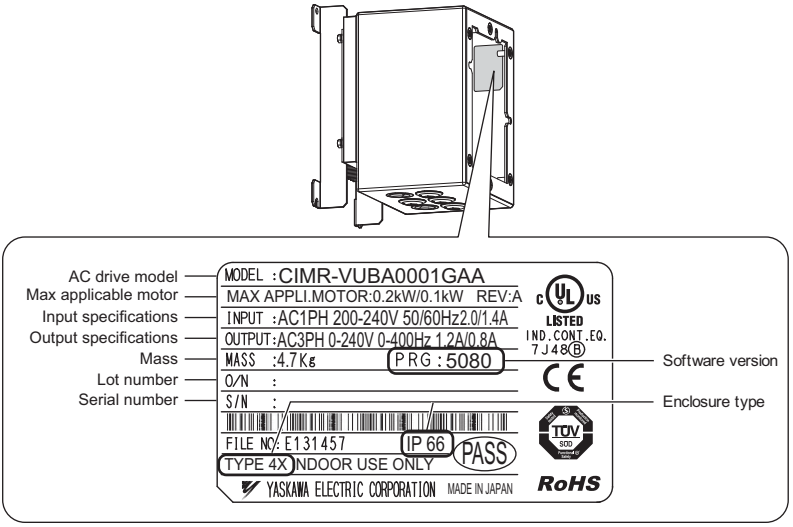

Figure 1 Nameplate Information for Drives without Filter

■ Drive Model Identification

The V1000 NEMA Type 4X, IP66 drive type is indicated by the letters “G” or “H” in the AC drive model designation code. Refer to the Quick Start Guide for complete model number information.

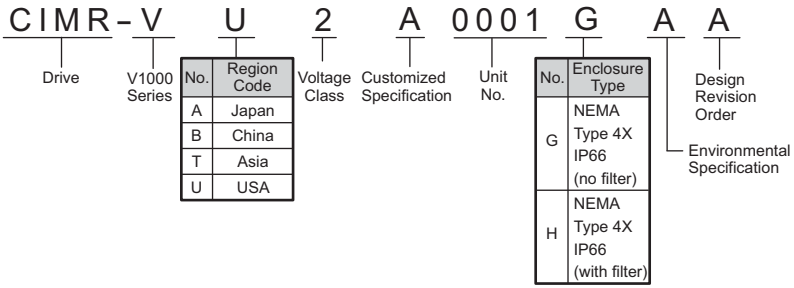

Figure 2 Drive Model Number

◆ Contents and Packaging

Table 1 Contents of Package

Description:	V1000 NEMA Type 4X IP66 Drive	Quick Start Guide	Installation Manual	CD
–	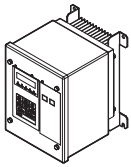			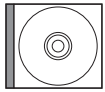
Quantity:	1	1	1	1

◆ Required Additional Parts

Table 2 lists additional parts for use with the drive.

Table 2 Additional Parts

Parts Sold Separately	Description
Cable glands	Only use products recommended by Yaskawa. For details, refer to *Cable Gland Selection on page 36*. To order cable glands or fuses, contact your supplier.
Fuse	

◆ Tool Requirements

Straight-edge Screwdriver: A straight-edge screwdriver is needed.

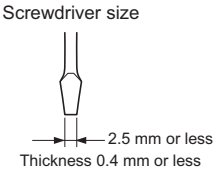

Figure 3 Screwdriver Size

Socket Wrench: An 8 mm or 10 mm socket wrench or nut driver. The tool requirement is based on drive model.

Table 3 Tool Requirements by Drive Model CIMR-V□

Tool required	Single-Phase 200 V Class	Three-Phase 200 V Class	Three-Phase 400 V Class
8 mm socket wrench	BA0001G/H BA0002G/H BA0003G/H BA0006G/H BA0010G/H BA0012G/H	2A0001G/H 2A0002G/H 2A0004G/H 2A0006G/H 2A0008G 2A0010G/H 2A0012G/H 2A0018G 2A0020G/H	4A0001G/H 4A0002G/H 4A0004G/H 4A0005G/H 4A0007G/H 4A0009G/H 4A0011G/H
10 mm socket wrench	–	2A0030G/H 2A0040G/H 2A0056G/H 2A0069G/H	4A0018G/H 4A0023G/H 4A0031G/H 4A0038G/H

4 Components

◆ Drive Components

■ V1000 Drive Model CIMR-V□2□0001G

Drive

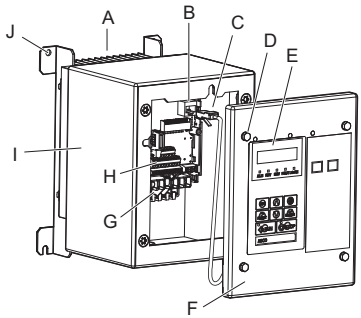

Bottom of the drive

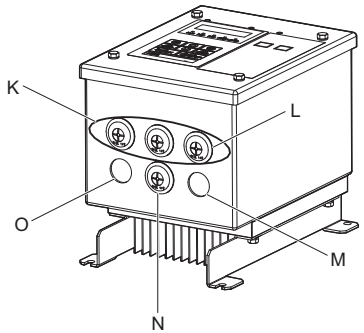

A – Heatsink
B – LED operator cable connector
C – LED operator cable
D – Front cover screw (4)
E – LED operator
F – Front cover
G – Main circuit terminals
H – Control circuit terminals
I – NEMA Type 4X, IP66 enclosure
J – Mounting hole (4)
K – Control circuit conduit hole (3)
L – Rubber bushing (4)
M – Motor wiring conduit hole
N – Main circuit wiring conduit hole
O – Power supply wiring conduit hole

Figure 4 V1000 Drive Model CIMR-V□2□0001G

NOTICE: *The rubber bushing used in the drive enclosure does not guarantee protection from water and dust. The rubber bushings can be removed without the use of a tool. For more permanent installations, replace rubber bushings with UL approved cable glands or gland cover plates with NEMA Type 4X, or IP66 integrity.*

Note: *Refer to Drive Cooling Fans on page 43* for more information.

■ V1000 Drive Model CIMR-V□2□0001H

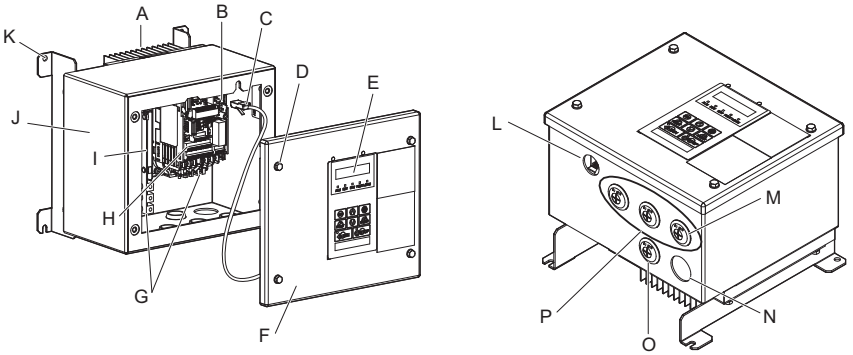

A – Heatsink
B – LED operator cable connector
C – LED operator cable
D – Front cover screw (4)
E – LED operator
F – Front cover
G – Main circuit terminals
H – Control circuit terminals
I – Filter
J – NEMA Type 4X, IP66 enclosure
K – Mounting hole (4)
L – Power supply wiring conduit hole
M – Rubber bushing (4)
N – Motor wiring conduit hole
O – Main circuit wiring conduit hole
P – Control circuit conduit hole (3)

Figure 5 V1000 Drive Model CIMR-V□2□0001H

NOTICE: *The rubber bushing used in the drive enclosure does not guarantee protection from water and dust. The rubber bushings can be removed without the use of a tool. For more permanent installations, replace rubber bushings with UL approved cable glands or gland cover plates with NEMA Type 4X, or IP66 integrity.*

Note: ***Refer to Drive Cooling Fans on page 43*** for more information.

◆ LED Operator Display Overview

The LED operator located on the front of the protective enclosure is different than the LED operator on the standard V1000 drive. Differences include:

- The “ALM”, “REV”, “DRV”, and “FOUT” lights are below the data display area, not to the right of the data display area.
- The “LO/RE” light is below the data display area and to the right, not on the LO/RE key.
- A STOP light is on the upper left of the STOP key.

LO/RE LED and RUN LED Indications on page 16 describes the unique characteristics of the V1000 NEMA Type 4X, IP66 LED operator compared to the standard V1000.

Refer to the drive Quick Start Guide for more details on the function of the LED Operator.

■ LED Operator

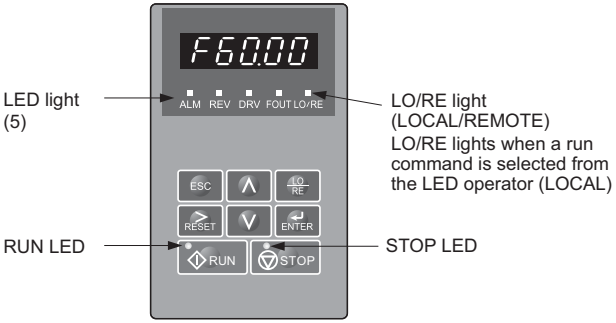

Figure 6 V1000 NEMA Type 4X, IP66 Drive LED Operator

◆ LO/RE LED and RUN LED Indications

Table 4 LED Display

LED	Lit	Flashing	Off
LO/RE	When run command is selected from LED operator (LOCAL)	–	Run command is selected from device other than LED operator (REMOTE)
RUN	During run	• During deceleration to stop • When a run command is input and frequency reference is 0	During stop
STOP	During stop	• During deceleration at a fast-stop • During deceleration • During stop by interlock operation	• During run • During deceleration to stop • When a run command is input and frequency reference is 0

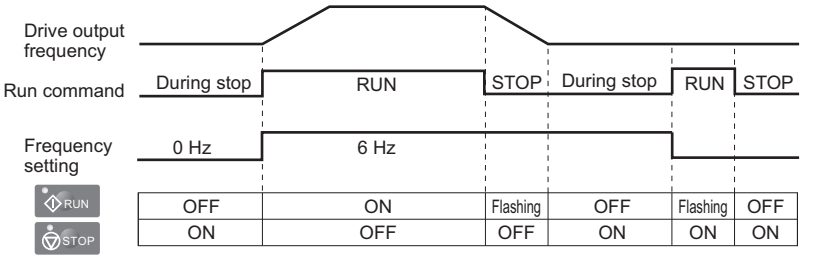

Figure 7 RUN LED and Drive Operation

5 Mechanical Installation

◆ Installation Environment

To help prolong the performance life of the drive, install the drive in an environment that is within the specifications listed in *Table 5*.

Table 5 Installation Environment

Environment	Conditions
Installation Area	Indoors
Ambient Temperature	-10°C to +40°C Drive reliability improves in environments without wide temperature fluctuations.
Storage Temperature	-20°C to +60°C
Surrounding Area	Install the drive in an environment suitable for NEMA Type 4X, IP66 enclosures: **NEMA Type 4X** – Enclosures constructed for either indoor or outdoor use to provide a degree of protection to personnel against incidental contact with the enclosed equipment; to provide a degree of protection against falling dirt, rain, sleet, snow, windblown dust, splashing water, hose-directed water, and corrosion; and that will be undamaged by the external formation of ice on the enclosure. **IP66** – Dust-tight enclosures to do not allow any dust to penetrate. The enclosure guards the drive against powerful jetting water sprayed from any direction and is protected against access to hazardous parts with a wire.
Altitude	1000 m or lower
Vibration	10 to 20 Hz at 9.8 m/s^2 20 to 55 Hz at 5.9 m/s^2
Orientation	Install the drive vertically to maintain maximum cooling effects.

◆ Installation Spacing

Table 6 explains the required installation spacing to maintain sufficient space for airflow and wiring. Install the heatsink against a closed surface to avoid diverting cooling air around the heatsink.

Table 6 Correct Installation Spacing

Side Clearance	Top/Bottom Clearance
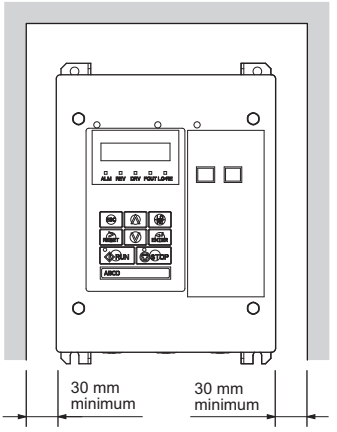	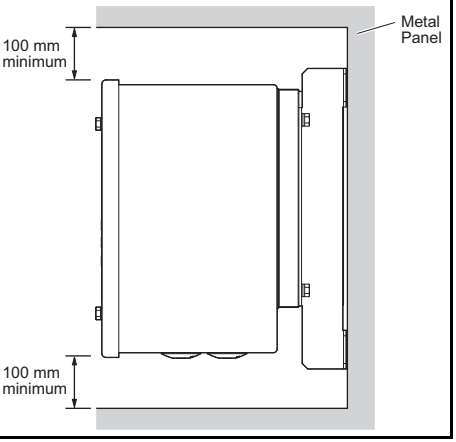

NOTICE: *Do not install the drive using the Side-by-Side method available for standard V1000 drive models. Improper drive cooling may result in damage to the drive.*

◆ Exterior and Mounting Dimensions

Table 7 V1000 Drive Dimensions for Models BA0001G to 4A0004G

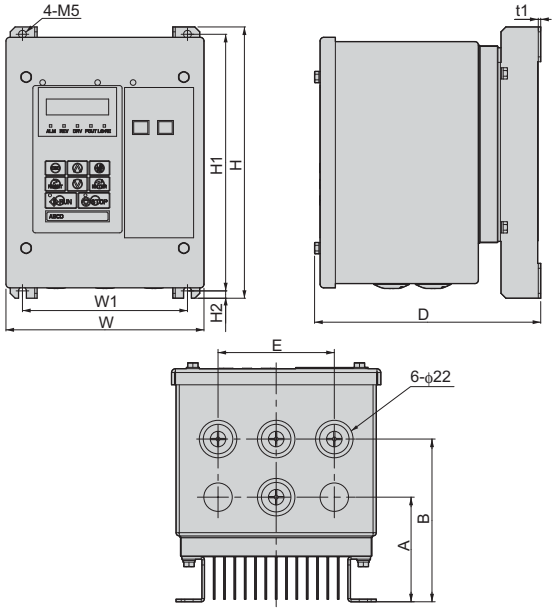

Voltage Class	Drive Model CIMR-V□	Dimensions mm (in)										
		W	H	D	W1	H1	H2	t1	A	B	E	Weight kg (lbs)
Single-Phase 200 V Class	BA0001G	162 (6.38)	222 (8.74)	185 (7.28)	135 (5.32)	210 (8.27)	6 (0.24)	2 (0.08)	81 (3.19)	126 (4.96)	90 (3.54)	4.7 (10.36)
	BA0002G											4.7 (10.36)
	BA0003G											4.9 (10.80)
Three-Phase 200 V Class	2A0001G											4.7 (10.36)
	2A0002G											4.7 (10.36)
	2A0004G											4.8 (10.58)
	2A0006G											4.8 (10.58)
Three-Phase 400 V Class	4A0001G											5.0 (11.02)
	4A0002G											5.0 (11.02)
	4A0004G											5.1 (11.24)

Table 8 V1000 Drive Dimensions for Models BA0006G to 4A0011G

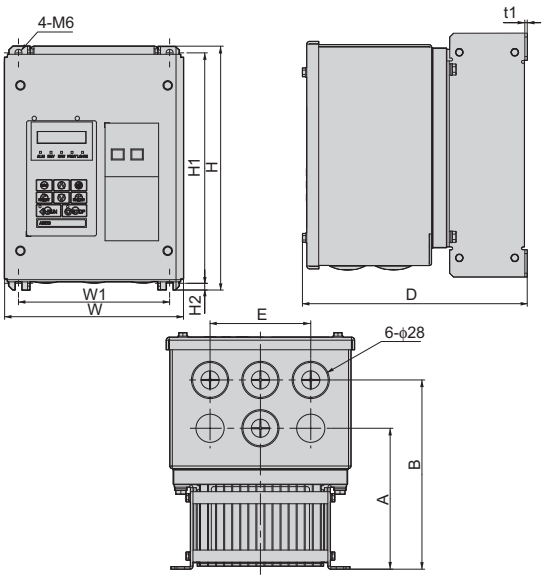

Voltage Class	Drive Model CIMR-V□	Dimensions mm (in)										
		W	H	D	W1	H1	H2	t1	A	B	E	Weight kg (lbs)
Single-Phase 200 V Class	BA0006G	187 (7.36)	255 (10.04)	235 (9.25)	158 (6.22)	241 (9.49)	7 (0.28)	2.5 (0.10)	140 (5.51)	188 (7.40)	100 (3.94)	7.8 (17.2)
	BA0010G											7.8 (17.2)
	BA0012G											8.2 (18.08)
Three-Phase 200 V Class	2A0008G <1>											7.7 (16.98)
	2A0010G											7.7 (16.98)
	2A0012G											7.7 (16.98)
	2A0018G <1>											8.1 (17.86)
	2A0020G											8.1 (17.86)
Three-Phase 400 V Class	4A0005G											7.7 (16.98)
	4A0007G											7.9 (17.42)
	4A0009G											7.9 (17.42)
	4A0011G											8.1 (17.86)

<1> Only available in Asia

Table 9 V1000 Drive Dimensions for Models 2A0030G to 4A0038G

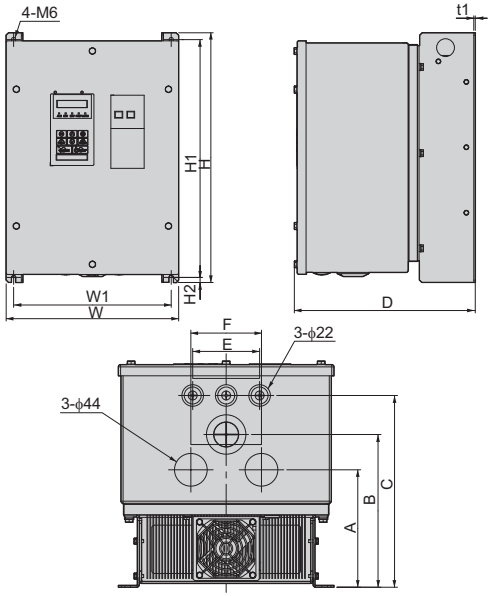

Voltage Class	Drive Model CIMR-V□	Dimensions mm (in)												
		W	H	D	W1	H1	H2	t1	A	B	C	E	F	Weight kg (lbs)
Three-Phase 200 V Class	2A0030G	290 (11.42)	420 (16.54)	305 (12.01)	265 (10.43)	400 (15.75)	8.5 (0.33)	2.5 (0.10)	158 (6.22)	205.5 (8.09)	258 (10.16)	90 (3.54)	95 (3.74)	21.8 (48.06)
	2A0040G													21.8 (48.06)
	2A0056G													23.2 (51.15)
Three-Phase 400 V Class	4A0018G													21.7 (47.84)
	4A0023G													21.8 (48.06)
	4A0031G													22.9 (50.49)
	4A0038G													23.2 (51.15)

Table 10 V1000 Drive Dimensions for Model 2A0069G

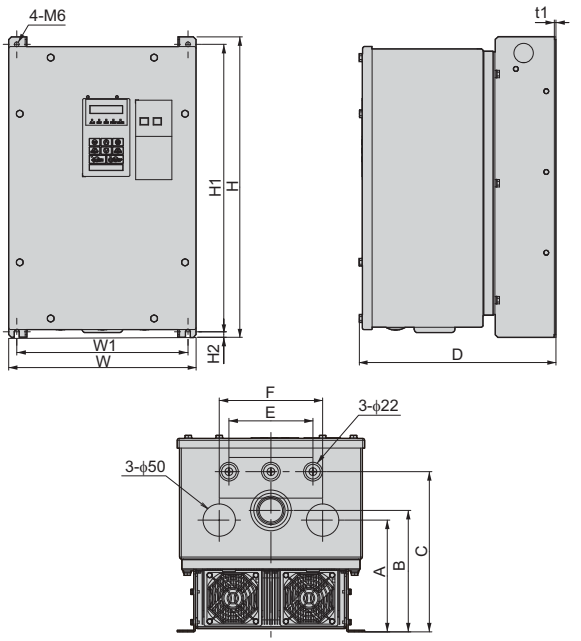

Voltage Class	Drive Model CIMR-V□	Dimensions mm (in)												
		W	H	D	W1	H1	H2	t1	A	B	C	E	F	Weight kg (lbs)
Three-Phase 200 V Class	2A0069G	290 (11.42)	465 (18.31)	305 (12.01)	265 (10.43)	445 (17.52)	8.5 (0.33)	2.5 (0.10)	173 (6.81)	188 (7.40)	248 (9.76)	130 (5.12)	160 (6.30)	27.7 (61.07)

Table 11 V1000 Drive Dimensions for Model BA0001H to 4A0004H

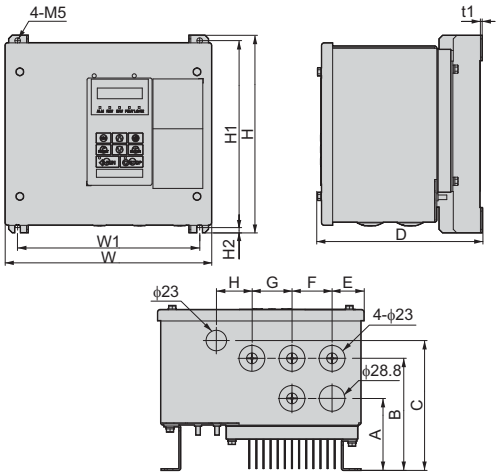

Voltage Class	Drive Model CIMR-V□	Dimensions mm (in)															
		W	H	D	W1	H1	H2	t1	A	B	C	E	F	G	H	Weight kg (lbs)
Single-Phase 200 V Class	BA0001H	232 (9.13)	222 (8.74)	185 (7.28)	204.5 (8.05)	210 (8.27)	6 (0.24)	2 (0.08)	81 (3.19)	126 (4.96)	146 (5.75)	36 (1.42)	45 (1.77)	45 (1.77)	40 (1.58)	5.6 (12.35)
	BA0002H															5.6 (12.35)
	BA0003H															5.8 (12.79)
Three-Phase 200 V Class	2A0001H															5.6 (12.35)
	2A0002H															5.6 (12.35)
	2A0004H															5.7 (12.57)
	2A0006H															5.7 (12.57)
Three-Phase 400 V Class	4A0001H															5.9 (13.01)
	4A0002H															5.9 (13.01)
	4A0004H															6.0 (12.23)

Table 12 V1000 Drive Dimensions for Model BA0006H to 4A0011H

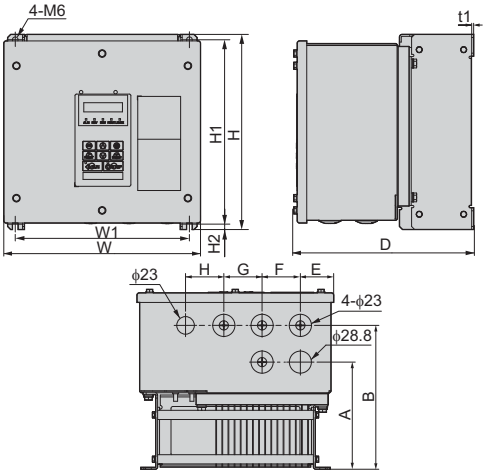

Voltage Class	Drive Model CIMR-V□	Dimensions mm (in)													
		W	H	D	W1	H1	H2	t1	A	B	E	F	G	H	Weight kg (lbs)
Single-Phase 200 V Class	BA0006H	257 (10.12)	255 (10.04)	235 (9.25)	227.5 (8.96)	241 (9.49)	7 (0.28)	2.5 (0.10)	140 (5.51)	188 (7.40)	43.5 (1.71)	50 (1.97)	50 (1.97)	50 (1.97)	8.9 (19.62)
	BA0010H														9.0 (19.84)
	BA0012H														9.3 (20.50)
Three-Phase 200 V Class	2A0010H														8.9 (19.62)
	2A0012H														8.9 (19.62)
	2A0020H														9.2 (20.28)
Three-Phase 400 V Class	4A0005H														8.8 (19.40)
	4A0007H														8.9 (19.62)
	4A0009H														8.9 (19.62)
	4A0011H														9.2 (20.28)

Table 13 V1000 Drive Dimensions for Model 2A0030H to 4A0031H

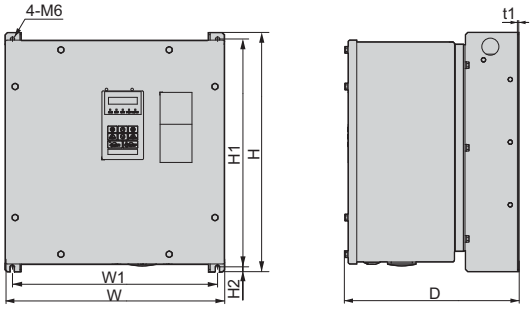

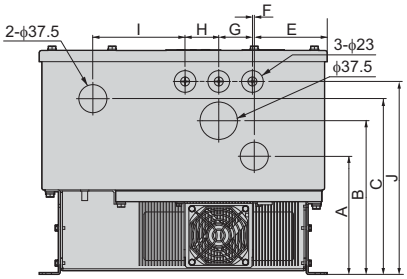

Voltage Class	Drive Model CIMR-V□	Dimensions mm (in)																	Weight kg (lbs)
		W	H	D	W1	H1	H2	t1	A	B	C	J	E	F	G	H	I		
Three-Phase 200 V Class	2A0030H	385 (15.16)	420 (16.54)	305 (12.01)	360 (14.17)	400 (15.75)	8.5 (0.33)	2.5 (0.10)	158 (6.22)	205.5 (8.09)	235 (9.25)	258 (10.16)	97.5 (3.84)	2.5 (0.10)	45 (1.77)	45 (1.77)	123.3 (4.85)		28.1 (61.95)
	2A0040H																		28.1 (61.95)
	2A0056H																		29.5 (65.04)
Three-Phase 400 V Class	4A0018H																		27.9 (61.51)
	4A0023H																		28.0 (61.73)
	4A0031H																		29.1 (64.15)

Table 14 V1000 Drive Dimensions for Model 2A0069H

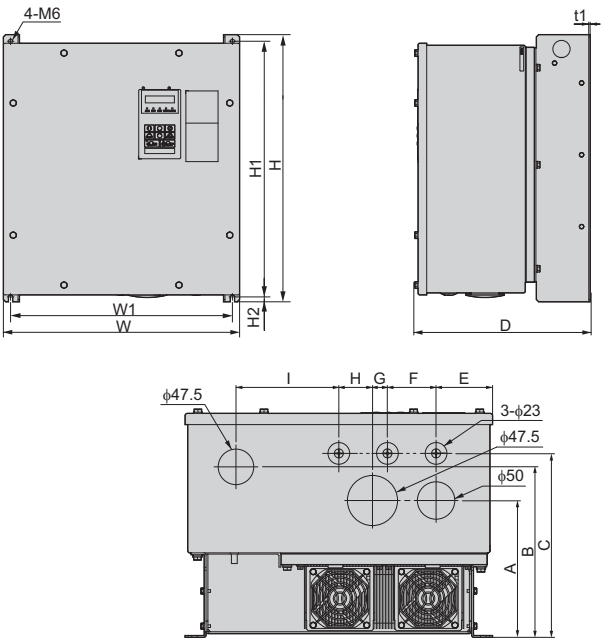

Voltage Class	Drive Model CIMR-V□	Dimensions mm (in)															
		W	H	D	W1	H1	H2	t1	A	B	C	E	F	G	H	I	Weight kg (lbs)
Three-Phase 200 V Class	2A0069H	411 (16.18)	465 (18.31)	305 (12.01)	386 (15.20)	445 (17.52)	8.5 (0.33)	2.5 (0.10)	183 (7.21)	228 (8.98)	246 (9.69)	75.5 (2.97)	65 (2.56)	20 (0.79)	45 (1.77)	137.5 (5.41)	33.9 (74.74)

Table 15 V1000 Drive Dimensions for Model 4A0038H

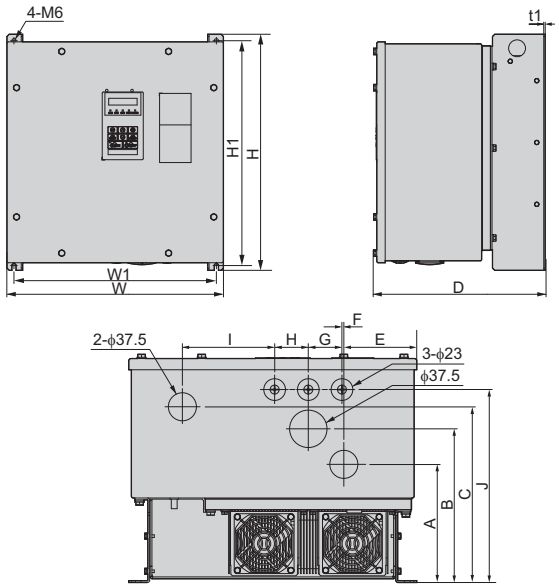

Voltage Class	Drive Model CIMR-V□	Dimensions mm (in)																
		W	H	D	W1	H1	H2	t1	A	B	C	J	E	F	G	H	I	Weight kg (lbs)
Three-Phase 400 V Class	4A0038H	385 (15.16)	420 (16.54)	305 (12.01)	360 (14.17)	400 (15.75)	8.5 (0.33)	2.5 (0.10)	158 (6.22)	205.5 (8.09)	235 (9.25)	258 (10.16)	97.5 (3.84)	2.5 (0.10)	45 (1.77)	45 (1.77)	123.3 (4.85)	29.4 (64.82)

6 Electrical Installation

◆ Section Safety

⚠ DANGER

Electrical Shock Hazard

Do not connect or disconnect wiring while the power is on.

Failure to comply will result in death or serious injury.

Disconnect all power to the drive, wait at least five minutes after all indicators are off, measure the DC bus voltage to confirm safe level, and check for unsafe voltages before servicing to prevent electric shock. The internal capacitor remains charged even after the power supply is turned off. The charge indicator LED will extinguish when the DC bus voltage is below 50 Vdc.

⚠ WARNING

Electrical Shock Hazard

Do not operate equipment with covers removed.

Failure to comply could result in death or serious injury.

The diagrams in this section may show drives without covers or safety shields to show details. Reinstall covers or shields before operating the drive and run the drive according to the instructions described in this manual.

Do not allow unqualified personnel to use equipment.

Failure to comply could result in death or serious injury.

Maintenance, inspection, and replacement of parts must be performed only by authorized personnel familiar with installation, adjustment, and maintenance of this product.

⚠ WARNING

Do not use damaged wires, place excessive stress on wiring, or damage the wire insulation.

Failure to comply could result in death or serious injury.

Fire Hazard

Tighten all terminal screws to the specified tightening torque.

Loose electrical connections could result in death or serious injury by fire due to overheating of electrical connections.

NOTICE

Damage to Equipment

Observe proper electrostatic discharge procedures (ESD) when handling the drive and circuit boards.

Failure to comply may result in ESD damage to circuitry.

Never shut the power off while the drive is outputting voltage.

Failure to comply may cause the application to operate incorrectly or damage the drive.

Do not operate damaged equipment.

Failure to comply may cause further damage to the equipment.

Do not connect or operate any equipment with visible damage or missing parts.

Do not use unshielded cable for control wiring.

Failure to comply may cause electrical interference resulting in poor system performance.

Use shielded twisted-pair wires and ground the shield to the ground terminal of the drive.

Properly connect all pins and connectors.

Failure to comply may prevent proper operation and possibly damage equipment.

◆ Wiring Preparation

1. Refer to ***Cable Gland Selection on page 36*** to select the proper cable glands for the drive.
2. Prepare all cables with terminal ends to ensure proper connections.
3. Remove the rubber bushing covering the conduit openings at the bottom of the drive. Review ***Figure 8*** to route the main circuit and control circuit cables through the proper conduit openings.

NOTICE: *The rubber bushing used in the drive enclosure does not guarantee protection from water and dust. The rubber bushings can be removed without the use of a tool. For more permanent installations, replace rubber bushings with UL approved cable glands or gland cover plates with NEMA Type 4X, or IP66 integrity.*

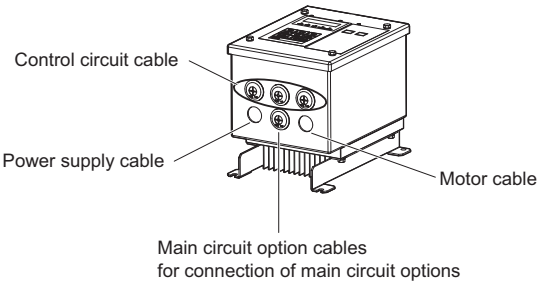

Figure 8 Conduit Openings

◆ Wiring Instructions

Refer to the Standard and Main Circuit Connection Diagrams in the Quick Start Guide for detailed schematic wiring illustrations.

NOTICE: *Do not attempt to disassemble the protective enclosure surrounding the drive. The protective enclosure is constructed as a single piece to include the heatsink. Attempting to disassemble the enclosure may void the enclosures protective integrity.*

■ Removing the Front Cover

Remove the front cover of the drive to access the main circuit and control circuit wiring.

1. Loosen the captive screws holding the front cover in place. Do not remove the screws from the cover. Remove the front cover.

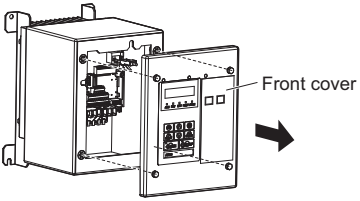

Figure 9 Removing the Front Cover

2. Press firmly on the tabs holding the LED operator cable in place to disconnect the cable.

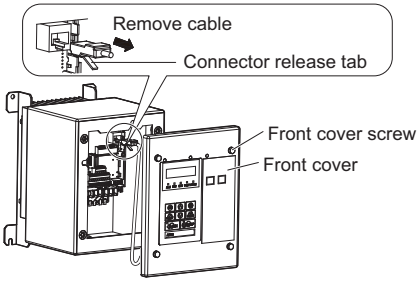

Figure 10 Removing the LED Operator Cable

■ Main Circuit and Control Circuit Wiring

NOTICE: *Use only the recommended multi conductor cable and use only one cable per cable gland. Attempting to pass more than one wire through a cable gland create a space between wires that reduces the waterproofing and dustproofing capabilities of the cable gland, and may damage the drive.*

NOTICE: *Properly seal the rubber gasket along the outside of the cable gland. Improper seals may allow water or oil into the drive and damage components.*

Refer to the Electrical Installation chapter of the drive Quick Start Guide for proper main circuit and control circuit wiring type, gauge, tightening torque and procedures.

Note: Use 3-wire cable for single phase input, and 4-wire cable for 3-phase input.

1. After removing the rubber bushings, insert the cable glands into the holes and tighten them with the locknut.
   Refer to Cable Gland Selection on page 36 for the maximum allowable tightening torque.

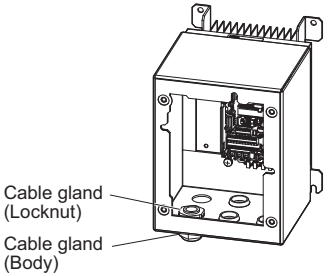

Figure 11 Inserting the Cable Glands

2. Route the cables through the cable glands, following the instructions in ***Cable Gland Selection on page 36***.

Note: Use UL approved cable glands or gland cover plates with NEMA Type 4X, or IP66 integrity for all drive conduit holes.

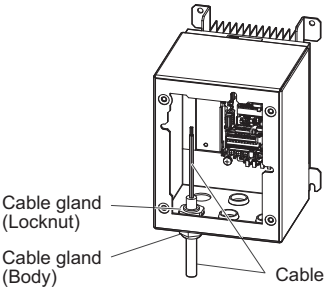

Figure 12 Cable Routing

3. Tighten the cable gland caps.
4. Connect the wires to the main and control circuit terminals.

■ Reattaching the Front Cover

1. Insert the LED operator cable into the correct port on the drive. Refer to the ***Figure 10***.
2. Replace the front cover on the drive and fasten the screws according to ***Table 16***.

NOTICE: *Tighten all screws to the specified tightening torque. Loose screws may allow moisture or dust to enter the protective enclosure and damage drive components.*

NOTICE: *Do not pinch or damage the sealing gasket when attaching the front cover. Damage to the gasket may allow moisture or dust to enter the protective enclosure and damage drive components.*

NOTICE: *Do not use silicone sealant with cable glands or front cover to reinforce waterproofing. Corrosive vapors produced by the sealant can damage circuit boards and compromise the watertight integrity of the protective enclosure.*

NOTICE: *Do not pinch the LED operator cable between the waterproof/dustproof enclosure and the front cover when putting the front cover back on. This could damage the operator cable.*

■ Front Cover Screws and Tightening Torque

Refer ***Table 16*** for tightening torque specifications.

Table 16 Front Cover Installation Screws and Tightening Torque

Voltage Class	Model No. CIMR-V□	Installation Screw Size	Tightening Torque N·m (lb-in)
Single Phase 200 V Class	BA0001 to BA0012	M5	2.0 to 2.5 (17.7 to 22.1)
Three Phase 200 V Class	2A0001 to 2A0020	M5	2.0 to 2.5 (17.7 to 22.1)
	2A0030 to 2A0069	M6	5.4 to 6.0 (47.8 to 53)
Three Phase 400 V Class	4A0001 to 4A0011	M5	2.0 to 2.5 (17.7 to 22.1)
	4A0018 to 4A0038	M6	5.4 to 6.0 (47.8 to 53)

◆ Fuse Installation

For details on selecting the proper fuse, refer to the Quick Start Guide packaged with the drive.

WARNING! *Electrical Shock Hazard. Connect the recommended fuses between each input terminal and the main circuit power supply (3-phase: L1, L2, L3, single-phase: L1, L2). Failure to use fuses in the power supply could result in death or serious injury in the event of a short circuit inside the drive enclosure.*

WARNING! *Fire Hazard. Select the correct main circuit fuse for use with the drive. Failure to comply could result in death or serious injury due to fire. Refer to the Quick Start Guide packaged with the drive to select the correct main circuit fuse for UL/CE compliance.*

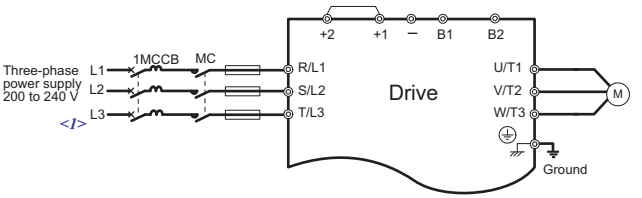

Figure 13 Fuse Installation

<1> Single-phase drives do not have an L3 terminal.

7 Conditions of Acceptability

Adhere to the installation conditions specified in this manual to take full advantage of the NEMA Type 4X/IP66 design of this drive.

◆ Resistance Against Chemicals and Solvents

Table 17 lists the information on chemical and solvent tolerability of the drive. The drive enclosure meets these requirements:

- UL50E: Enclosures for Electrical Equipment, Environmental Considerations
  NEMA Type 4X
- International Standard IEC 60529 Degrees of protection provided by enclosures (IP Code)
  IP66

Refer to the appropriate enclosure specification for more details on the enclosures resistance to chemicals and solvents.

Table 17 Chemical and Solvent Tolerability

Reagent	Solvent
• Hydrochloric acid (10%) • Sulfuric acid (10%) • Nitric acid (10%) • Ammonia water • Sodium chloride	• Methanol • Ethanol

NOTICE: *Do not allow a stream of chemicals or solvents to be sprayed directly onto the drive enclosure. Failure to do so can damage the drive.*

NOTICE: *Prevent moisture and other solvents from entering the drive enclosure when removing the front cover. Failing to do so can damage the drive or considerably shorten its expected performance life.*

8 Cable Gland Selection

◆ Cable Glands for North America

Specific cable glands and gland plate covers are not listed for North America. *Table 18* and *Table 19* list the enclosure conduit hole dimensions by drive model. Use these tables to select cable glands or gland plate covers from a local supplier. Use UL approved cable glands or gland cover plates with NEMA Type 4X, or IP66 integrity for all drive conduit holes. Cable glands or gland plate covers are supplied by the customer.

■ V1000 Drive Model BA0001G to 4A0038G

Table 18 Conduit Hole Dimensions for Models BA0001G to 4A0038G

Voltage Class	Drive Model CIMR-V□	Main Circuit				Control Circuit	
		Conduit Hole Diameter mm (in)			Number of Holes	Hole Diameter mm (in)	Total Holes
		Input Holes	Output Holes	Option Holes			
Single-Phase 200 V Class	BA0001G	22 (0.87)	22 (0.87)	22 (0.87)	1	22 (0.87)	3
	BA0002G						
	BA0003G						
	BA0006G	28 (1.10)	28 (1.10)	28 (1.10)	1		
	BA0010G						
	BA0012G						
Three-Phase 200 V Class	2A0001G	22 (0.87)	22 (0.87)	22 (0.87)	1	22 (0.87)	3
	2A0002G						
	2A0004G						
	2A0006G	28 (1.10)	28 (1.10)	28 (1.10)	1		
	2A0010G						
	2A0012G						
	2A0020G						
	2A0030G						
	2A0040G						
	2A0056G						
	2A0069G						

Voltage Class	Drive Model CIMR-V☐	Main Circuit				Control Circuit	
		Conduit Hole Diameter mm (in)			Number of Holes	Hole Diameter mm (in)	Total Holes
		Input Holes	Output Holes	Option Holes			
Three-Phase 400 V Class	4A0001G	22 (0.87)	22 (0.87)	22 (0.87)	1	22 (0.87)	3
	4A0002G						
	4A0004G						
	4A0005G	28 (1.10)	28 (1.10)	28 (1.10)	1		
	4A0007G						
	4A0009G						
	4A0011G						
	4A0018G						
	4A0023G						
	4A0031G						
	4A0038G						

■ V1000 Drive Model BA0001H to 4A0038H

Table 19 Conduit Hole Dimensions for Models BA0001H to 4A0038H

Voltage Class	Drive Model CIMR-V☐	Main Circuit				Control Circuit	
		Conduit Hole Diameter mm (in)			Number of Holes	Hole Diameter mm (in)	Total Holes
		Input Holes	Output Holes	Option Holes			
Single-Phase 200 V Class	BA0001H	23 (0.91)	28.8 (1.13)	23 (0.91)	1	23 (0.91)	3
	BA0002H						
	BA0003H						
	BA0006H						
	BA0010H						
	BA0012H						

Voltage Class	Drive Model CIMR-V□	Main Circuit				Control Circuit	
		Conduit Hole Diameter mm (in)			Number of Holes	Hole Diameter mm (in)	Total Holes
		Input Holes	Output Holes	Option Holes			
Three-Phase 200 V Class	2A0001H	23 (0.91)	28.8 (1.13)	23 (0.91)	1	23 (0.91)	3
	2A0002H						
	2A0004H						
	2A0006H						
	2A0010H						
	2A0012H						
	2A0020H						
	2A0030H	37.5 (1.48)	37.5 (1.48)	37.5 (1.48)			
	2A0040H						
	2A0056H	47.5 (1.87)	47.5 (1.87)	47.5 (1.87)			
	2A0069H	47.5 (1.87)	50 (1.97)	47.5 (1.87)			
Three-Phase 400 V Class	4A0001H	23 (0.91)	28.8 (1.13)	23 (0.91)	1	23 (0.91)	3
	4A0002H						
	4A0004H						
	4A0005H						
	4A0007H						
	4A0009H						
	4A0011H						
	4A0018H	37.5 (1.48)	37.5 (1.48)	37.5 (1.48)			
	4A0023H						
	4A0031H						
	4A0038H						

◆ Cable Glands for Asia

Yaskawa recommends the following SC cable glands but is not limited to SEIWA ELECTRIC MFG Co., Ltd. for the V1000 NEMA Type 4X/IP66 drive. The SEIWA cable gland is not readily available outside of Asia.

Table 20 Cable Glands for Drive Main Circuit Wiring

Voltage Class	Model No. CIMR-V□	Conduit Hole Diameter mm			Cable Gland (Seiwa)			
		Input Holes	Output Holes	Option Holes	Appropriate Wiring Diameter mm	Product Number	Tightening Torque N·m	
							Body, Cap	Body, Locknut
Single-Phase 200 V Class	BA0001G	22	22	22	10.5 to 12.5	SCL-14A	2.5 to 2.9	2.9 to 3.4
	BA0002G							
	BA0003G							
	BA0006G	28	28	28	10.6 to 12	SC-4A	2.0 to 2.5	2.9 to 3.4
	BA0010G				12.1 to 14	SC-4B		
	BA0012G				14.1 to 16	SC-4C		
Three-Phase 200 V Class	2A0001G	22	22	22	10.5 to 12.5	SCL-14A	2.5 to 2.9	2.9 to 3.4
	2A0002G							
	2A0004G							
	2A0006G							
	2A0008G	28	28	28	10.6 to 12	SC-4A	2.0 to 2.5	2.9 to 3.4
	2A0010G				10.6 to 12	SC-4A		
	2A0012G				12.1 to 14	SC-4B		
	2A0018G				14.1 to 16	SC-4C		
	2A0020G				14.1 to 16	SC-4C		
	2A0030G	44	44	22	20.1 to 22	SC-6M	4.9 to 5.3	5.8 to 6.3
	2A0040G							
	2A0056G				22.1 to 24.5	SC-6A		
	2A0069G	50	50	22	30 to 32	SCL-38A	3.4 to 3.9	4.9 to 5.3

Voltage Class	Model No. CIMR-V□	Conduit Hole Diameter mm			Cable Gland (Seiwa)			
		Input Holes	Output Holes	Option Holes	Appropriate Wiring Diameter mm	Product Number	Tightening Torque N·m	
							Body, Cap	Body, Locknut
Three-Phase 400 V Class	4A0001G	22	22	22	10.5 to 12.5	SCL-14A	2.5 to 2.9	2.9 to 3.4
	4A0002G							
	4A0004G							
	4A0005G	28	28	28	10.6 to 12	SC-4A	2.0 to 2.5	2.9 to 3.4
	4A0007G							
	4A0009G							
	4A0011G							
	4A0018G	44	44	22	20.1 to 22	SC-6M	4.9 to 5.3	5.8 to 6.3
	4A0023G							
	4A0031G							
	4A0038G							

Note: Use 3-wire cable for single phase input, and 4-wire cable for 3-phase input.

Refer to the Electrical Installation chapter of the drive Quick Start Guide for proper main circuit wiring type, gauge, tightening torque and procedures.

■ Cable Sleeve Selection (Asia)

The cable sleeves in *Table 21* can be used if wire gauges are smaller than the diameter of the cable glands. Cable sleeves are useful to prevent ingress of environmental contaminants through the interior of the cable gland.

Table 21 Cable Sleeves

Compatible sleeve	Outer Wiring Diameter mm
SC-6-1×16	16
SC-6-1×17	17
SC-6-1×18	18
SC-6-1×19 SCL-38-1×27-28.5	19 27 to 28.5

■ SC/SCL Cable Glands for Control Circuit Wiring (Asia)

Table 22 Control Circuit Wiring Cable Glands

Drive-Side Conduit Openings		Cable Gland (Seiwa)			
Hole Diameter (mm)	Number of Holes	Appropriate Wiring Diameter (mm)	Product Number	Tightening Torque N·m	
				Body, Cap	Body, Locknut
22	3	6.1 to 7.5	SC-3M	1 to 1.5	2 to 2.5
		7.6 to 9.0	SC-3A		
		9.1 to 10.5	SC-3B		
		10.5 to 12.5	SCL-14A	2.5 to 2.9	2.9 to 3.4
		12.5 to 14.5	SCL-14B		

Refer to the Electrical Installation chapter of the drive Quick Start Guide for proper control circuit wiring type, gauge, tightening torque and procedures

■ SC-□□ Series Cable Gland Dimensions (Asia)

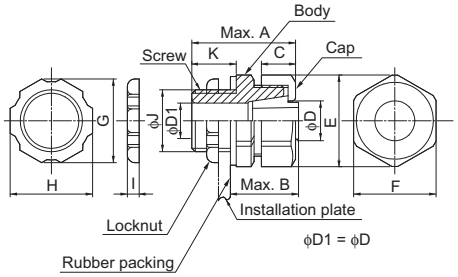

Figure 14 SC-□□ Series Cable Gland (SC-□□)

Table 23 SC Series Cable Gland Dimensions

Model	Dimensions mm												
	Screw			Body, Cap						Locknut			
	Name	Diam. ϕJ	Length K	A	B	C	ϕD	E	F	G	H	I	Rubber Packing Thickness
SC-3A	G 1/2	21.0	15	35	23	11.5	12	31.0	28.0	28.5	27	4	2.0
SC-3B													
SC-3M													

Model	Dimensions mm												
	Screw			Body, Cap						Locknut			
	Name	Diam. ϕJ	Length K	A	B	C	ϕD	E	F	G	H	I	Rubber Packing Thickness
SC-4A	G 3/4	26.4	15	37	25	14.0	17	38.0	35.0	34.5	33	4	2.0
SC-4B													
SC-4C													
SC-6A	G1 1/4	41.9	20	54	37	20	34	59.5	53.5	52	49	5	2.0
SC-6M													

■ SCL-□□□ Series Cable Gland Dimensions (Asia)

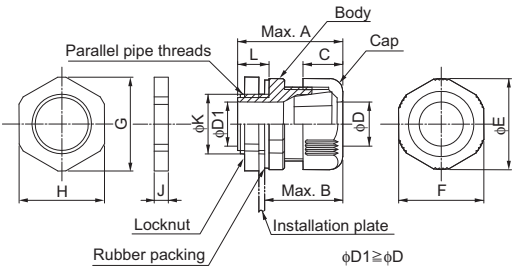

Figure 15 SCL-□□□ Series Cable Gland

Table 24 Cable Gland Dimensions (SCL-□□□)

Model	Dimensions mm												
	Screw			Body, Cap						Locknut			
	Name	Diam. ϕK	Length L	A	B	C	ϕD	ϕE	F	G	H	J	Rubber Packing Thickness
SCL-14A	G 1/4	21.0	11.0	37.0	27.5	14.0	15.5	32.0	30	33.0	30	5	1.5
SCL-14B													
SCL-38A	G1 1/2	47.8	16	56.5	42.5	25	40	61	58	61	58	6	2.0

9 Drive Cooling Fans

NOTICE: *Follow cooling fan replacement instructions. If the cooling fan is not properly installed, damage to the drive may occur. For drives with multiple cooling fans, replace all cooling fans when performing maintenance to ensure maximum useful product life.*

Contact your Yaskawa representative or the nearest Yaskawa sales office to order replacement cooling fans as required.

◆ Number of Cooling Fans and Types

■ V1000 Drive Model BA0001G to 4A0038G

Table 25 Number of Drive Cooling Fans for Models BA0001G to 4A0038G

Single-Phase 200V Class			Three-Phase 200V Class			Three-Phase 400V Class		
Drive Models	Number of Fans		Drive Models	Number of Fans		Drive Models	Number of Fans	
CIMR-V□	Internal Fan	External Fan	CIMR-V□	Internal Fan	External Fan	CIMR-V□	Internal Fan	External Fan
BA0001G	–	–	2A0001G	–	–	4A0001G	–	–
BA0002G	–	–	2A0002G	–	–	4A0002G	–	–
BA0003G	–	–	2A0004G	–	–	4A0004G	–	–
BA0006G	–	–	2A0006G	–	–	4A0005G	–	–
BA0010G	–	–	2A0008G	–	–	4A0007G	1	–
BA0012G	1	–	2A0010G	–	–	4A0009G	1	–
–	–	–	2A0012G	–	–	4A0011G	1	–
–	–	–	2A0018G	1	–	4A0018G	1	1
–	–	–	2A0020G	1	–	4A0023G	1	1
–	–	–	2A0030G	1	1	4A0031G	1	1
–	–	–	2A0040G	1	1	4A0038G	1	2
–	–	–	2A0056G	1	1	–	–	–
–	–	–	2A0069G	1	2	–	–	–

■ V1000 Drive Model BA0001H to 4A0038H

Table 26 Number of Drive Cooling Fans for Models BA0001H to 4A0038H

Single-Phase 200V Class			Three-Phase 200V Class			Three-Phase 400V Class		
Drive Models	Number of Fans		Drive Models	Number of Fans		Drive Models	Number of Fans	
CIMR-V□	Internal Fan	External Fan	CIMR-V□	Internal Fan	External Fan	CIMR-V□	Internal Fan	External Fan
BA0001H	–	–	2A0001H	–	–	4A0001H	–	–
BA0002H	–	–	2A0002H	–	–	4A0002H	–	–
BA0003H	–	–	2A0004H	–	–	4A0004H	–	–
BA0006H	–	–	2A0006H	–	–	4A0005H	–	–
BA0010H	1	–	2A0010H	1	–	4A0007H	–	–
BA0012H	1	–	2A0012H	1	–	4A0009H	–	–
–	–	–	2A0020H	1	–	4A0011H	1	–
–	–	–	2A0030H	1	1	4A0018H	1	1
–	–	–	2A0040H	1	1	4A0023H	1	1
–	–	–	2A0056H	1	1	4A0031H	1	1
–	–	–	2A0069H	1	2	4A0038H	1	2

◆ Cooling Fan Replacement

■ Required Parts

Table 2 lists parts required for cooling fan replacement.

Table 27 Additional Parts

Parts Sold Separately	Description
Cooling Fan	Contact your Yaskawa representative or the nearest Yaskawa sales office to order replacement cooling fans as required.
RTV Sealant	**Manufacturer:** Shin-Etsu PN: KE3494 **Description:** Non-Flow, Electronic Grade RTV **North America:** Shin-Etsu Silicones of America, Inc. 1150 Damar Street, Akron, Ohio 44305-1201 Phone: 800-544-1745, Fax: 330-630-9855, http://www.shinetsua.com/ **Asia:** Shin-Etsu Chemical Co., Ltd. 6-1, Ohtemachi 2-chome, Chiyoda-ku, Tokyo 100-0004, Japan Phone: 03-3246-5121, http://www.shinetsu.co.jp

■ Tool Requirements

Socket Wrench: An 8 mm or 10 mm socket wrench or nut driver. The tool requirement is based on drive model. Refer to *Table 28*.

Table 28 Tool Requirements by Drive Model CIMR-V□

Tool required	Single-Phase 200 V Class	Three-Phase 200 V Class	Three-Phase 400 V Class
8 mm socket wrench (cover removal)	BA0001G/H BA0002G/H BA0003G/H BA0006G/H BA0010G/H BA0012G/H	2A0001G/H 2A0002G/H 2A0004G/H 2A0006G/H 2A0008G 2A0010G/H 2A0012G/H 2A0018G 2A0020G/H	4A0001G/H 4A0002G/H 4A0004G/H 4A0005G/H 4A0007G/H 4A0009G/H 4A0011G/H
10 mm socket wrench (cover removal)	–	2A0030G/H 2A0040G/H 2A0056G/H 2A0069G/H	4A0018G/H 4A0023G/H 4A0031G/H 4A0038G/H
7 mm socket wrench (fan removal)	All models		

Refer to *Figure 16* for the location of the internal fan and the external fan.

WARNING! *Electrical Shock Hazard. Do not connect or disconnect wiring while the power is on. Failure to comply can result in serious personal injury. Before servicing the drive, disconnect all power to the equipment. The internal capacitor remains charged even after the power supply is turned off. After shutting off the power, wait for at least the amount of time specified on the drive before touching any components.*

CAUTION! *Burn Hazard. Do not touch a hot drive heatsink. Failure to comply could result in minor or moderate injury. Shut off the power to the drive when replacing the cooling fan. To prevent burns, wait at least 15 minutes and ensure the heatsink has cooled down.*

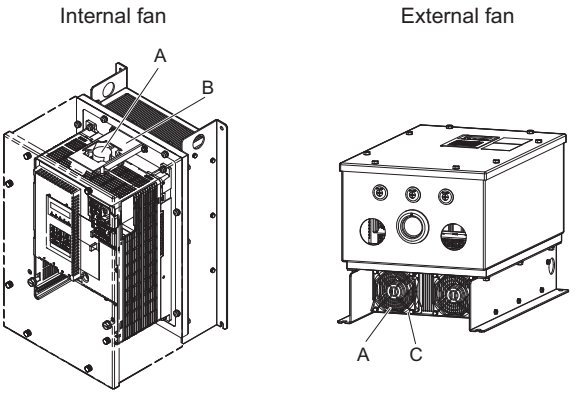

A – Fan
B – Fan support
C – Fan guard

Figure 16 Cooling Fan Location in 2A0069

Removing the Internal Fan

1. Remove the front cover.
2. Unplug the fan connector (CN7).

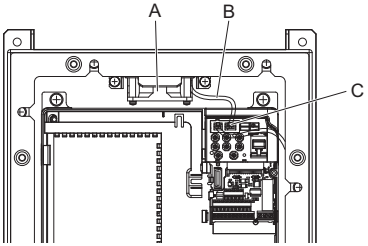

A – Internal fan
B – Fan relay cable
C – Fan connector (CN7)

Figure 17 Replacing the Internal Fan

3. Loosen the screws holding the fan unit in place, and remove the fan unit from the drive.

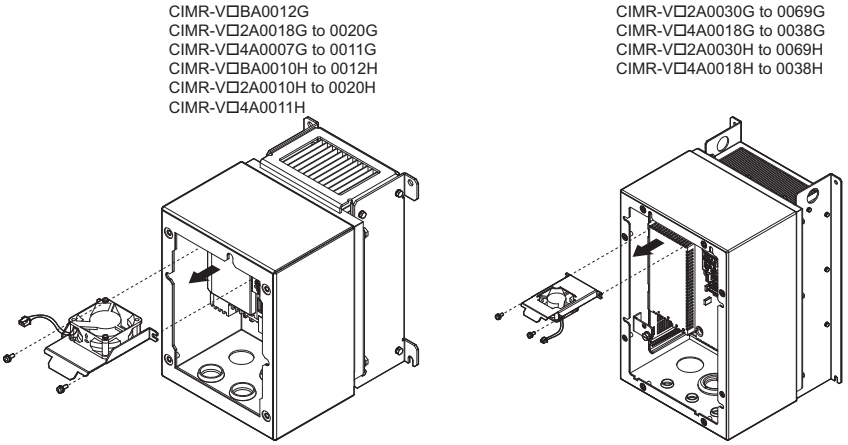

Figure 18 Replacing the Internal Fan

■ Installing the Internal Fan

1. Refer to ***Figure 19*** to fasten the replacement fan into place.

Note: Refer to ***Figure 20*** to check the three points listed below when connecting the fan and the fan support in the drive. Improper installation can damage the fan.

- Direction of the fan label
- Routing of fan lead wire
- Direction of fan support bracket

CIMR-V□BA0012G
CIMR-V□2A0018G to 0020G
CIMR-V□4A0007G to 0011G
CIMR-V□BA0010H to 0012H
CIMR-V□2A0010H to 0020H
CIMR-V□4A0011H

CIMR-V□2A0030G to 0069G
CIMR-V□4A0018G to 0038G
CIMR-V□2A0030H to 0069H
CIMR-V□4A0018H to 0038H

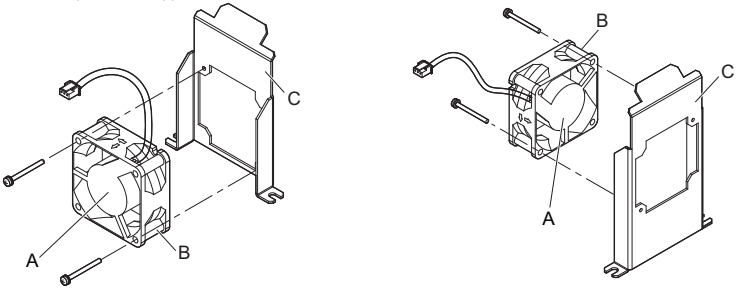

A – Label **B – Cooling Fan** **C – Fan support**

Figure 19 Internal Fan Replacement: Installation

2. Install the fan unit back into the drive enclosure in its original position.

3. Plug the fan connector (CN7) back in.

Removing the External Fan

1. Remove the front cover.
2. Unplug the fan connector (CN7).

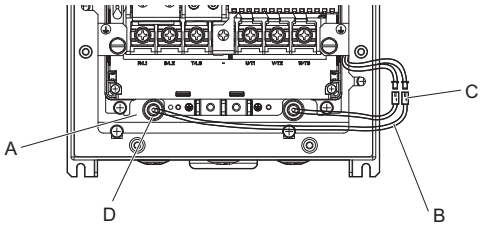

A – Fan <1>
B – Fan relay cable
C – Fan connector (CN7)
D – Rubber bushing

<1> The external fan is installed outside of the waterproof/dust-proof enclosure.

Figure 20 Replacing the External Fan (Removing the External Fan in 2A0069)

3. Remove the screws to take the fan guard out of the drive. Push the rubber bushing out of conduit hole and take the internal fan out of the drive.

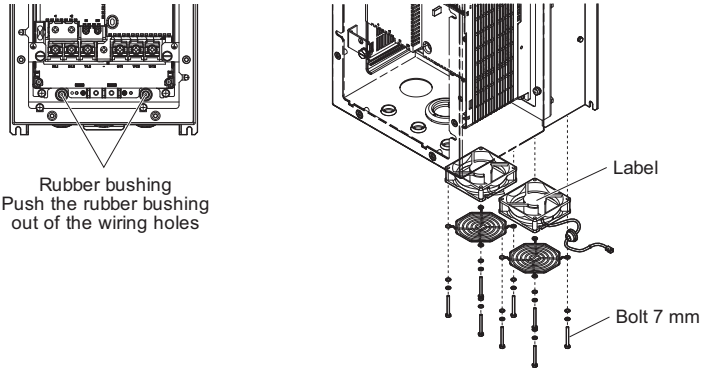

Figure 21 Replacing the External Fan

Installing the External Fan

The external fan installation procedure differs by drive model. Refer to *Figure 22* to install the external fan.

NOTICE: *Install the fan so that the labeling faces inwards. The fan may be damaged if it is facing the wrong direction.*

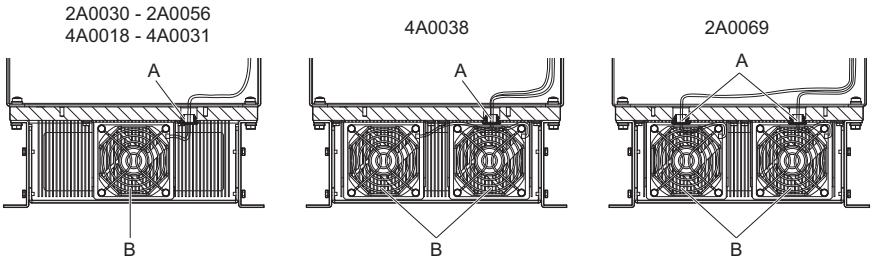

A – Conduit hole **B – Fan unit**

Figure 22 Number of the External Fan and Conduit holes

1. Place the rubber bushing for the fan into the heatsink holes.

NOTICE: *Make sure all bushings fit securely into place. If the rubber bushing left loose, water and dust can enter the drive.*

2. Feed the fan wiring through the rubber bushing.
3. Plug the fan connector back in.
4. Fill up the wiring hole in the rubber grommet to a minimum depth of 9.7 mm with RTV sealant (KE-3494) specified in *Table 27*.

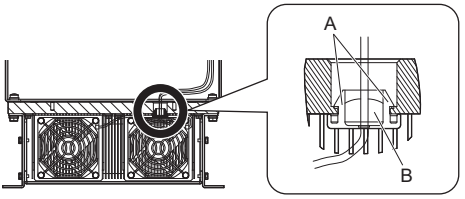

A – Tabs **B – Wiring hole filled with RTV sealant specified in *Table 27***

Figure 23 Fastening the Rubber bushing in 4A0038

5. Install the fan guard onto the fan.
6. Place the fan into its original position and fasten the fan into place.

10 Drive Replacement

NOTICE

Damage to Equipment

Replace the entire unit (drive enclosure, and heatsink) in the event that any single part becomes damaged.

The drive, waterproof/dustproof enclosure, and heatsink are constructed as a single piece, and it is not possible to replace the drive separately from the protective enclosure.

11 EMC Guidelines Compliance

Install the drives according to EMC Guidelines Compliance in the Quick Start Guide. For the V1000 NEMA Type 4X/IP66 drive with a filter, a noise filter does not need to be installed separately.

The compliance categories of the drives are listed here:

- Category C1: CIMR-V□BA0001H to 0012H
  CIMR-V□2A0001H to 0040H
  CIMR-V□4A0001H to 0038H
- Category C3: CIMR-V□2A0056H to 0069H

12 Revision History

Document numbers and revision dates are provided on the bottom of the back cover of the manual.

MANUAL NO.
TOBP C710606 35B <1>
Revision number

Published in Japan January 2009
Date of publication

Date of Publication	Rev. No.	Section	Revised Content
April 2015	<7>	Front cover	Revision: Format
		Back cover	Revision: Address, format
September 2012	<6>	All Chapters	Addition: Drive Models New Models: CIMR-V□BA0001H to BA0012H CIMR-V□2A0001H to 2A0006H, 2A0010H to 2A0012H, 2A0020H to 2A0069H CIMR-V□4A0001H to 4A0038H Revision: Revised and corrected entire documentation.
		Back cover	Revision: Address
July 2012	<5>	Back cover	Revision: Address
July 2011	<4>	Front cover, back cover	Revision: Format
September 2010	<3>	Back cover	Revision: Address
April 2010	<2>	Chapter 1, 6	Addition: Description on UL/CE compliant fuse
		Chapter 9	Deletion: Fuse Selection Chapter numbers following chapter 9 change after this deletion.
January 2009	<1>	All Chapters	Addition: Drive Models New Models: CIMR-V□2A0030 to 0069 CIMR-V□4A0018 to 0038 Corrections: Table of Contents
		Chapter 9	Addition: Drive cooling fans.
April 2008	–	–	First edition